SPEED SMASH BRANDING SHEET

FULL BRANDING

A full-body wrap completely transforms the game with your logos, event branding, colors, or party theme from top to bottom. Create a fully immersive, one-of-a-kind experience that seamlessly complements your event and makes a lasting impression on every guest.





SPEC SHEETS

If you're working with your own design team, these specification sheets provide all the dimensions needed to create your custom artwork. Simply use the templates below to build your designs and send us the final print-ready files for production (300dpi PNG, PDF, .ai, or .PSD files).

SPEED SMASH FULL BRANDING

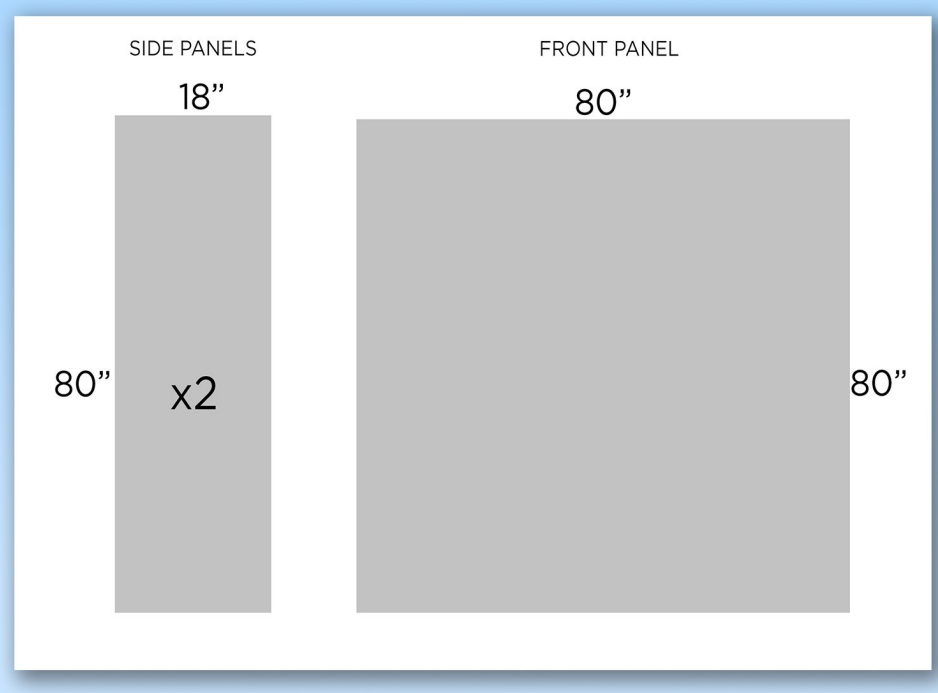

BUTTON MAP

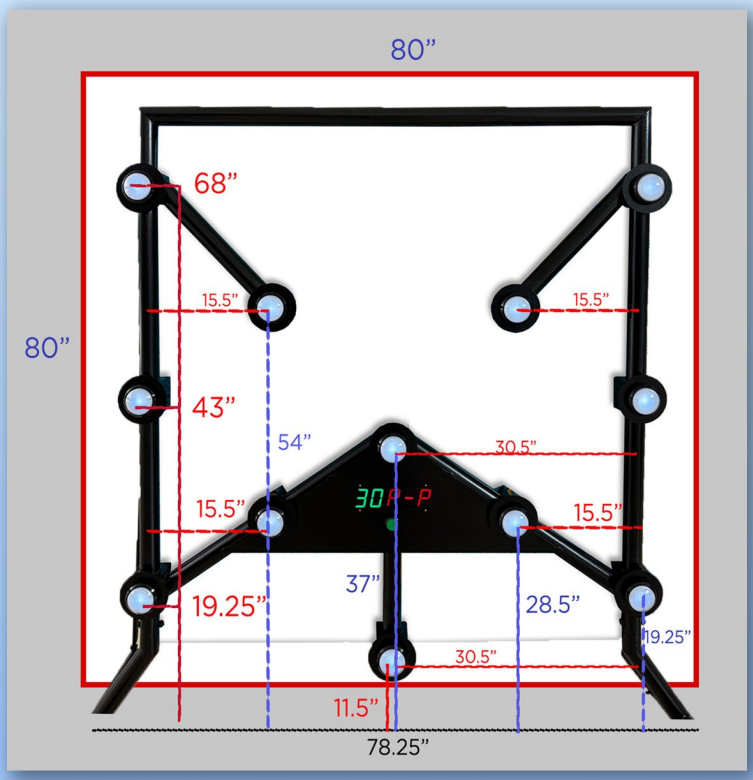

Important: Every panel measurement includes a 1-inch bleed on all sides. Keep all important text, logos, and graphics inside this safe area to prevent them from being trimmed during production. Background colors, patterns, and non-essential design elements should extend through the bleed to ensure a seamless wrap around the game. Provide all panels as rectangles for easy wrapping.